SEGINUS INC.

FAA/PMA Coffee Maker/Water Boiler Heater Elements

- Installation eligibility for Airbus/Boeing/Bombardier
- PMA Replacements for 11056-1/200-0368-01/240233 24D507239P02/3520-0551-01/3575-1251-05 3575-1251-07/3575-1252-05/440-0150-3 6001-99-0538/609604/611765/RGS3179

Goulet Aircraft Supply Ltd.

Head Office- WINNIPEG, MANITOBA Branch- EDMONTON, ALBERTA

SEGINUS INC.

The Affordable PMA Parts Company

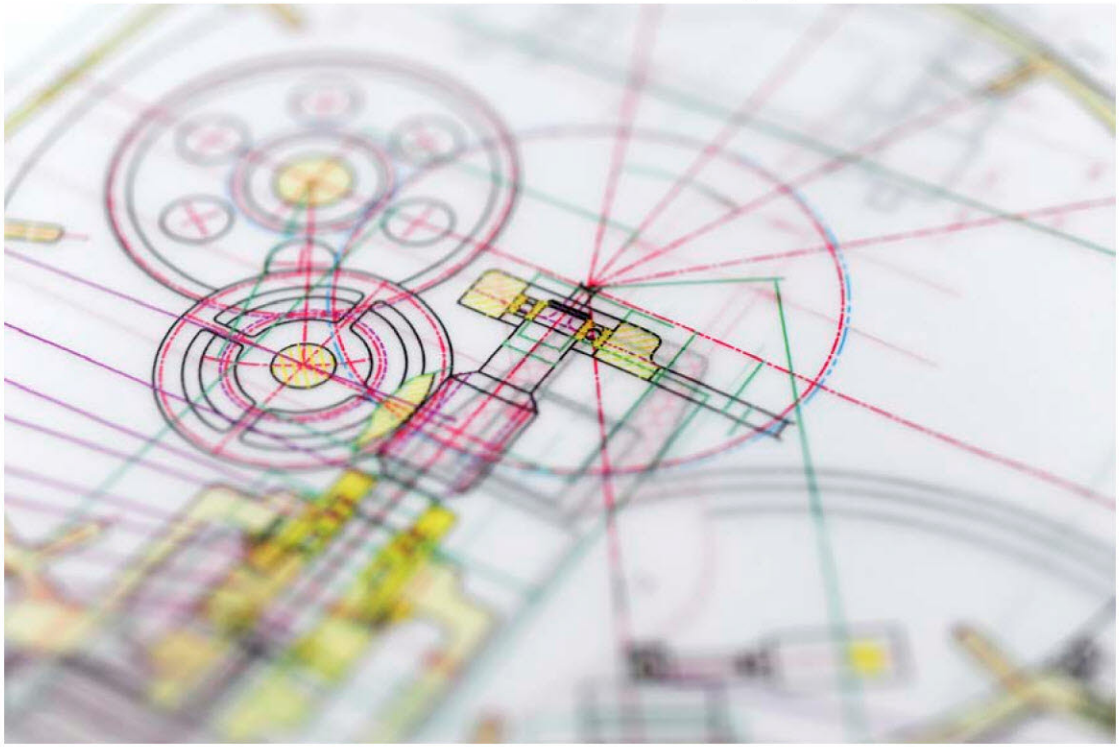

FAA PMA

Seginus Inc. is pleased to introduce Replacement Heater Cartridges: 440-0150-3EH, 3520-0551-01EH, 3575-1251-07EH, 3575-1252-05EH, 6001-99-0538EH, 11056-1EH, 240233EH, 609604EH, & 611765EH

OEM Part Numbers:
440-0150-3, 3520-0551-01, 3575-1251-07, 3575-1252-05, 6001-99-0538, 11056-1, 240233, 609604 & 611765

PMA Part Numbers:
440-0150-3EH, 3520-0551-01EH, 3575-1251-07EH, 3575-1252-05EH, 6001-99-0538EH, 11056-1EH, 240233EH, 609604EH, & 611765EH

Quantity Per Unit:
Various

Installation:
Galley Coffee Makers, & Water Boilers,

CMM Reference:
B/E Aerospace: 467-001, 4510-3 and 4510-4 Series, 425-0001-7 and -11, 11050 and 11225, DR4100, DR40, DA14-2 and Sell GmbH 64753 Series

These replacement heater cartridges are eligible for installation in Galley coffee makers and water boilers on various Boeing and Airbus aircraft.

Boeing and Airbus Model Eligibility:
Various

For more specific model eligibility details, please see the supplements section of our website. For sales information, please contact your regional distributor or our USA offices.

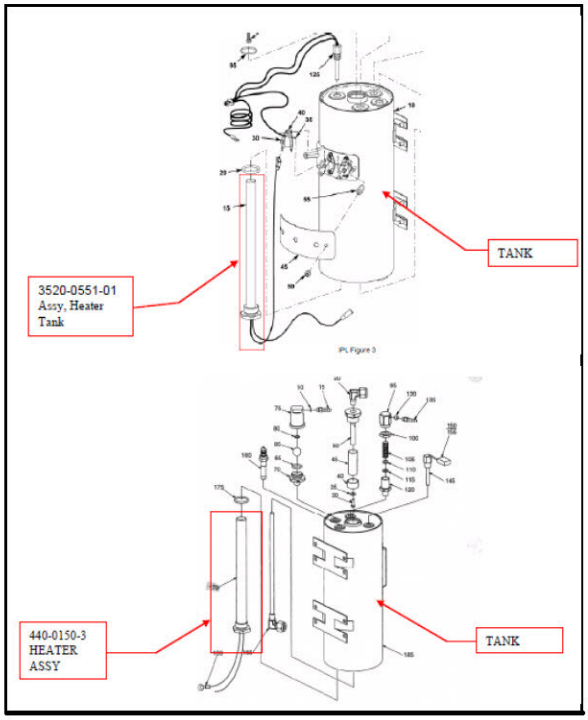

Proudly Distributed in Canada By: *Goulet Aircraft Supply Ltd.*

Head Office:
59 Eagle Dr.
Winnipeg, MB R2R 1V4 sales@gouletaircraft.com
Ph: 204-783-8512 Fax: 888-783-3302

Branch Office:
48 Airport Rd.
Edmonton, AB T5G 0W7 goulaced@telus.net
Ph: 780-452-4242 Fax: 888-454-4050

SEGINUS INC.
The Affordable PMA Parts Company

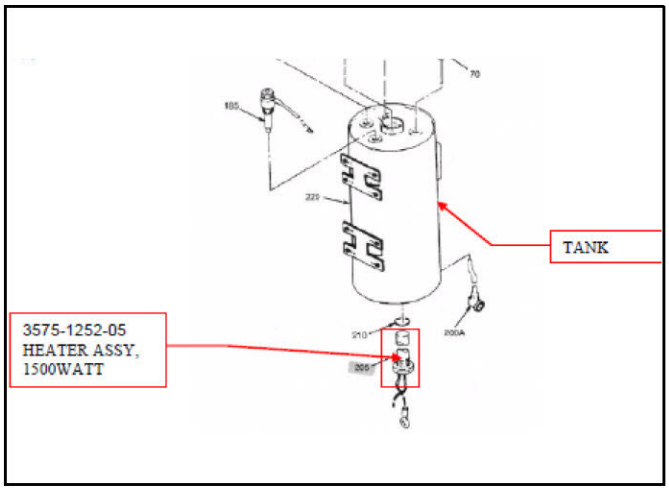

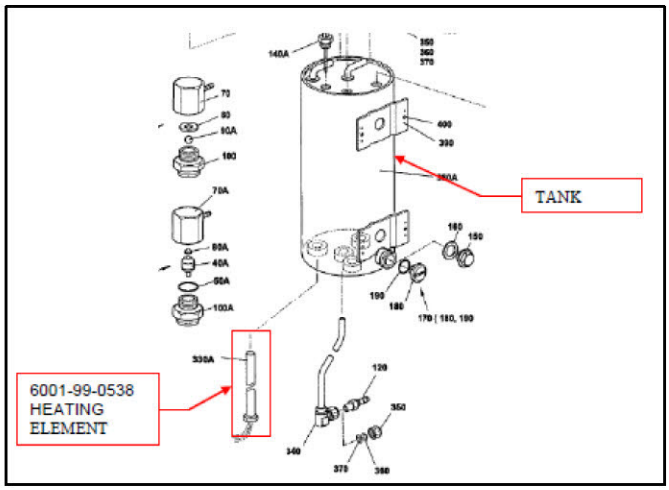

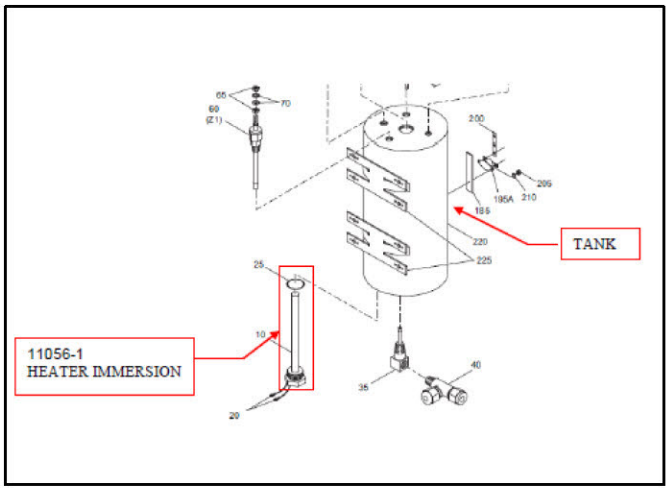

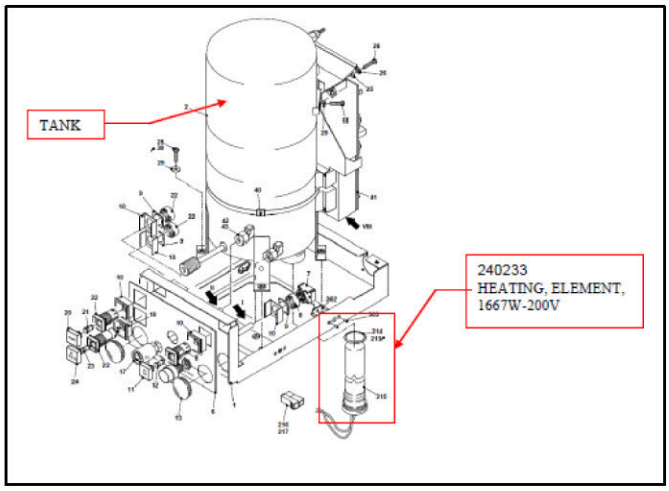

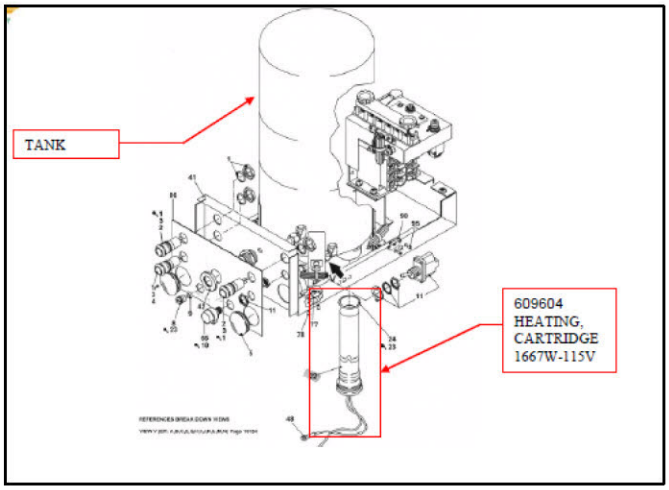

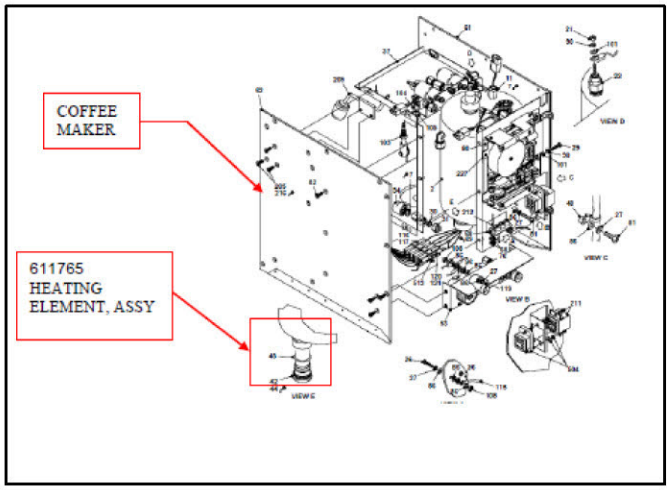

Proudly Distributed in Canada By: *Goulet Aircraft Supply Ltd.*

Head Office:
59 Eagle Dr.
Winnipeg, MB R2R 1V4 sales@gouletaircraft.com
Ph: 204-783-8512 Fax: 888-783-3302

Branch Office:
48 Airport Rd.
Edmonton, AB T5G 0W7 goulaced@telus.net
Ph: 780-452-4242 Fax: 888-454-4050

SEGINUS INC.
The Affordable PMA Parts Company

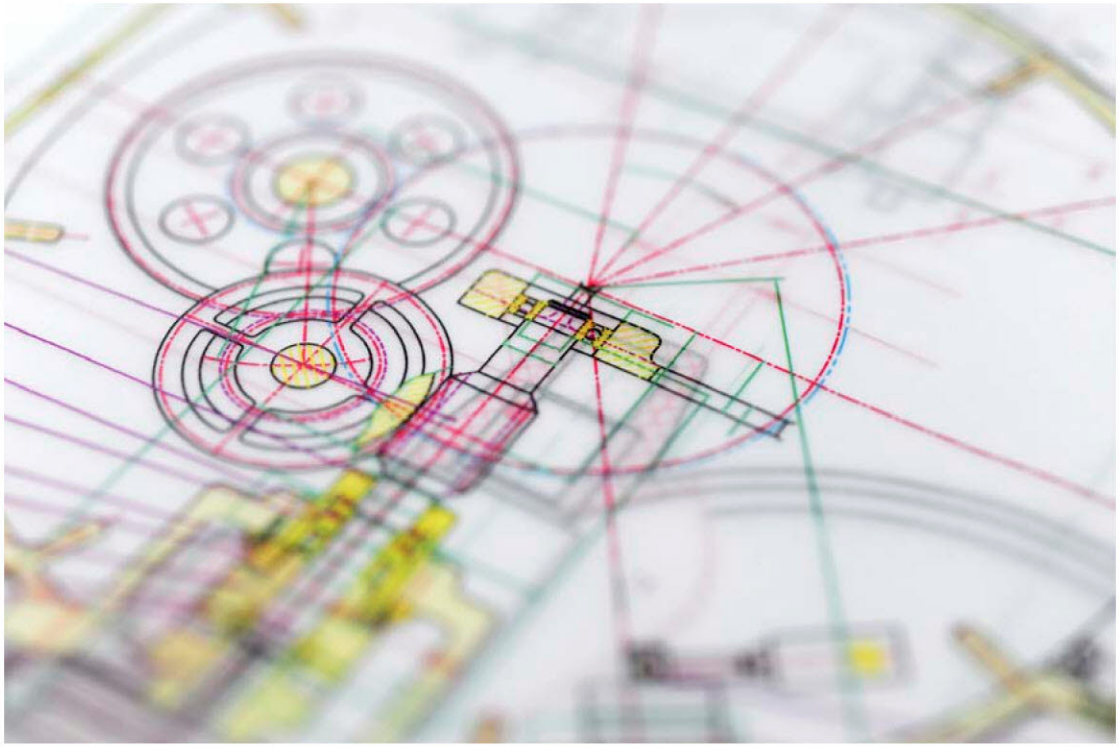

Seginus Inc. is pleased to introduce Immersion Heater 200-0368-01EH and Heater Assembly 3575-1251-05EH

FAA PMA

OEM Part Numbers:
200-0368-01
3575-1251-05

PMA Part Numbers:
200-0368-01EH
3575-1251-05EH

Quantity Per Unit:
Varies

Installation:
Aircraft Coffee Makers

CMM Reference:
B/E Aerospace:
3510-0039-01/03
TIA: 1448/1448-1/
1448-4 Series

The replacement Immersion Heater and Heater Assembly are eligible for installation in Aircraft Coffee Makers

Bombardier, Inc. & Airbus Model Eligibility:
Various

For more specific model eligibility details, please see the supplements section of our website. For sales information, please contact your regional distributor or our USA offices.

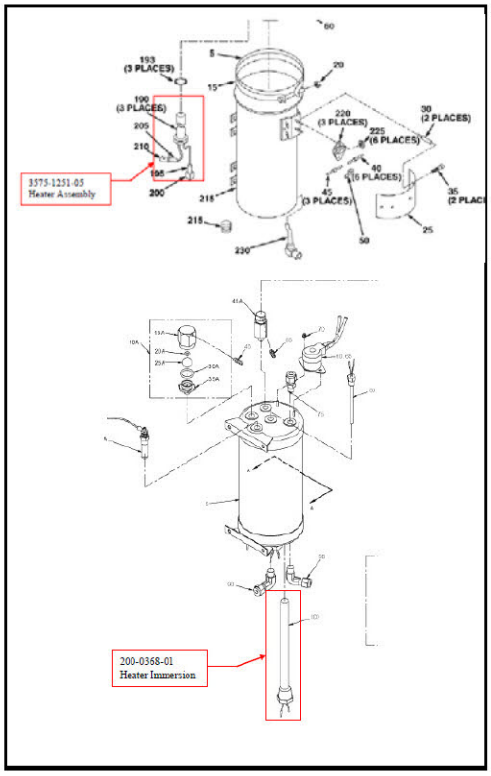

Proudly Distributed in Canada By: *Goulet Aircraft Supply Ltd.*

Head Office:
59 Eagle Dr.
Winnipeg, MB R2R 1V4 sales@gouletaircraft.com
Ph: 204-783-8512 Fax: 888-783-3302

Branch Office:
48 Airport Rd.
Edmonton, AB T5G 0W7 goulaced@telus.net
Ph: 780-452-4242 Fax: 888-454-4050

SEGINUS INC.
The Affordable PMA Parts Company

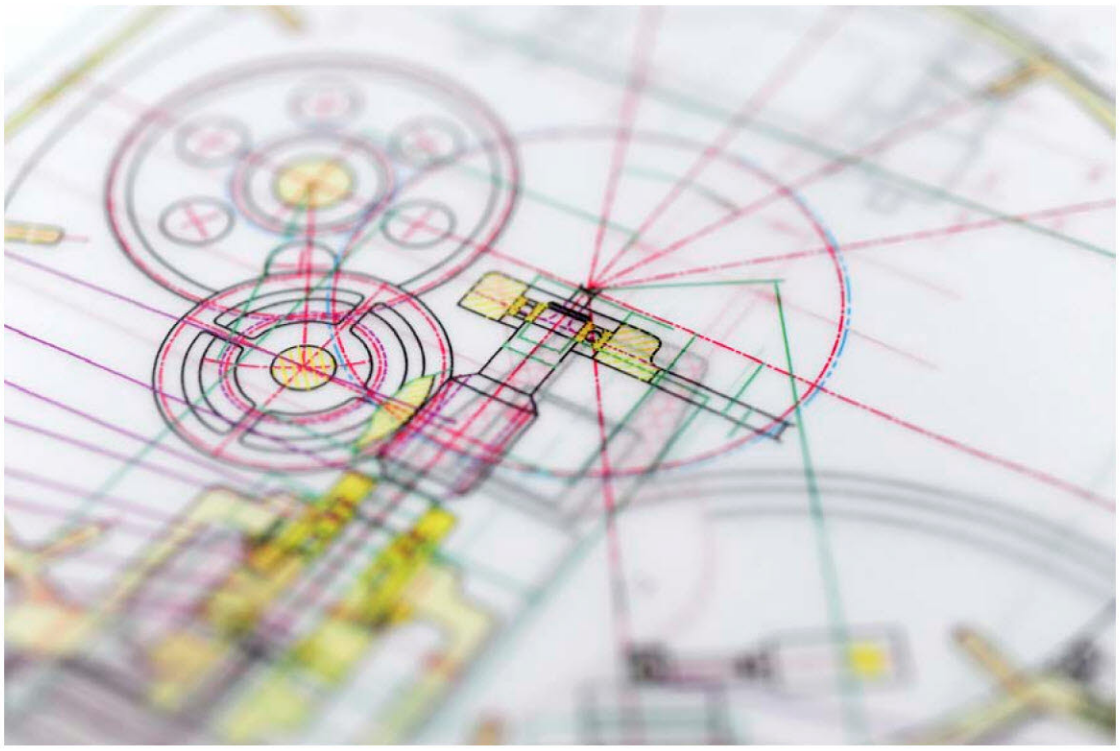

Seginus Inc. is pleased to introduce the RGS3179-EH **Water Boiler Heater Element**.

FAA PMA

OEM Part Numbers:
RGS3179

PMA Part Numbers:
RGS3179-EH

Quantity Per Unit:
3

Installation:
Water Boiler

CMM Reference:
Rumbold/Britax Sell
25-35-95

The RGS3179-EH Water Boiler Heater Elements are eligible for installation on Rumbold/Britax Sell GmbH aircraft Water Boilers. Heater Elements are eligible for installation Rumbold/Britax Sell GmbH Water Boilers P/N 62197-001-001

Model Eligibility:
Boeing Company:
717, 737, 757, 767, and 777

For more specific model eligibility details, please see the supplements section of our website. For sales information, please contact your regional distributor or our USA offices.

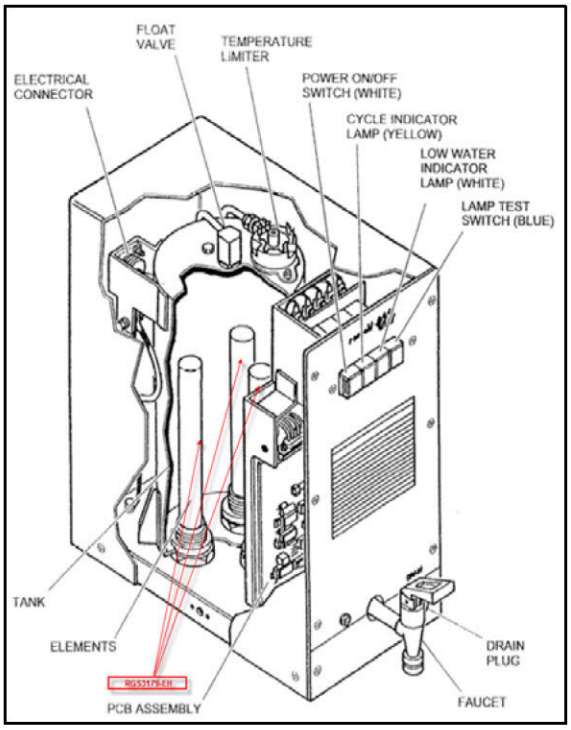

Proudly Distributed in Canada By: *Goulet Aircraft Supply Ltd.*

Head Office:
59 Eagle Dr.
Winnipeg, MB R2R 1V4 sales@gouletaircraft.com
Ph: 204-783-8512 Fax: 888-783-3302

Branch Office:
48 Airport Rd.
Edmonton, AB T5G 0W7 goulaced@telus.net
Ph: 780-452-4242 Fax: 888-454-4050

SEGINUS INC.
The Affordable PMA Parts Company

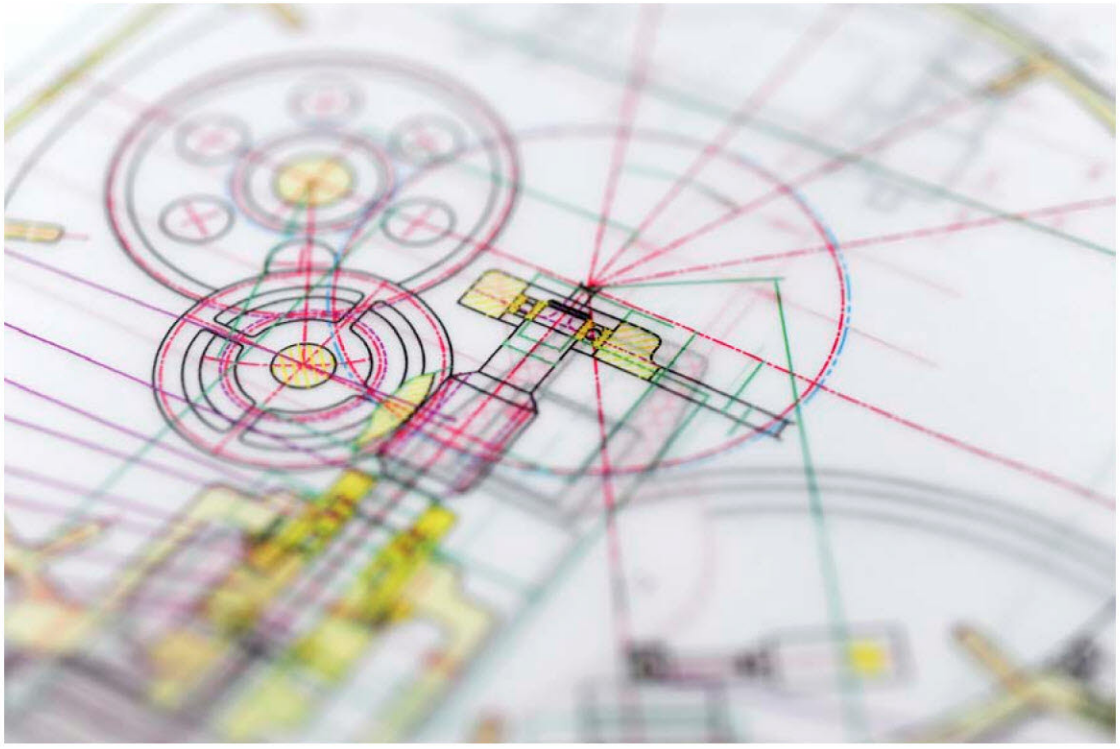

Seginus Inc. is pleased to introduce the 24D507239P02EH **Heater Cartridge**.

FAA
PMA

OEM Part Numbers:
24D507239P02

PMA Part Numbers:
24D507239P02EH

Quantity Per Unit:
3

Installation:
Lavatory water heaters
24E507009G02
24E507009G03

CMM Reference:
Goodrich 38-12-16

The 24D507239P02EH heater cartridge is eligible for installation on various Airbus aircraft lavatory water heaters. The lavatory water heater heats a small amount of water for hand and face washing.

Airbus Model Eligibility:
A310
A320
A330
A340

For more specific model eligibility details, please see the supplements section of our website. For sales information, please contact your regional distributor or our USA offices.

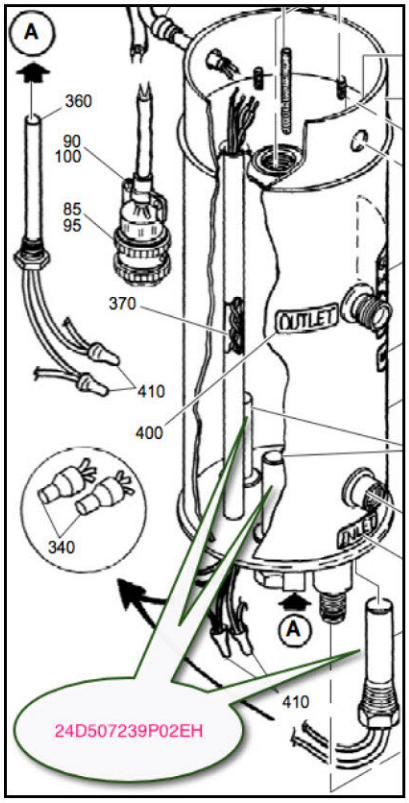

Proudly Distributed in Canada By: *Goulet Aircraft Supply Ltd.*

Head Office:
59 Eagle Dr.
Winnipeg, MB R2R 1V4 sales@gouletaircraft.com
Ph: 204-783-8512 Fax: 888-783-3302

Branch Office:
48 Airport Rd.
Edmonton, AB T5G 0W7 goulaced@telus.net
Ph: 780-452-4242 Fax: 888-454-4050